clever
BATHROOM & KITCHEN TAPS

REF: 62133

DESCRIPTION: Single-lever bath-shower mixer with aerator and diverter.

SERIES: GO!2 **RANGE:** STYLES BASIC **EAN:** 8425144270614

PRODUCT IMAGE:

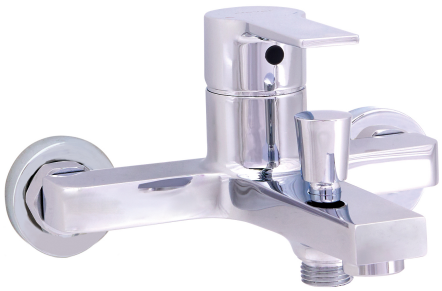

Included:

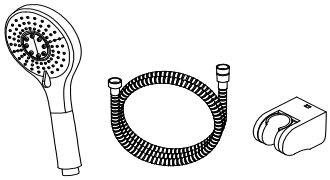

TECHNICAL DRAWING:

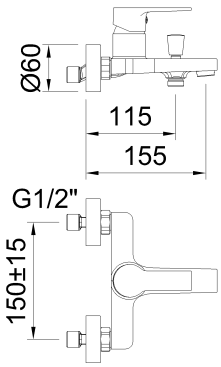

FINISH:

Chrome

WARRANTY:

CERTIFICATIONS:

SPARE PARTS:

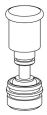

61516
Diverter

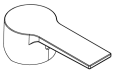

62136
Handle



96200
Aerator



96205
Ceramic cartridge
35



96238
Flange

Latest update: 06/10/2026

clever
BATHROOM & KITCHEN TAPS

EXPLODED VIEW:

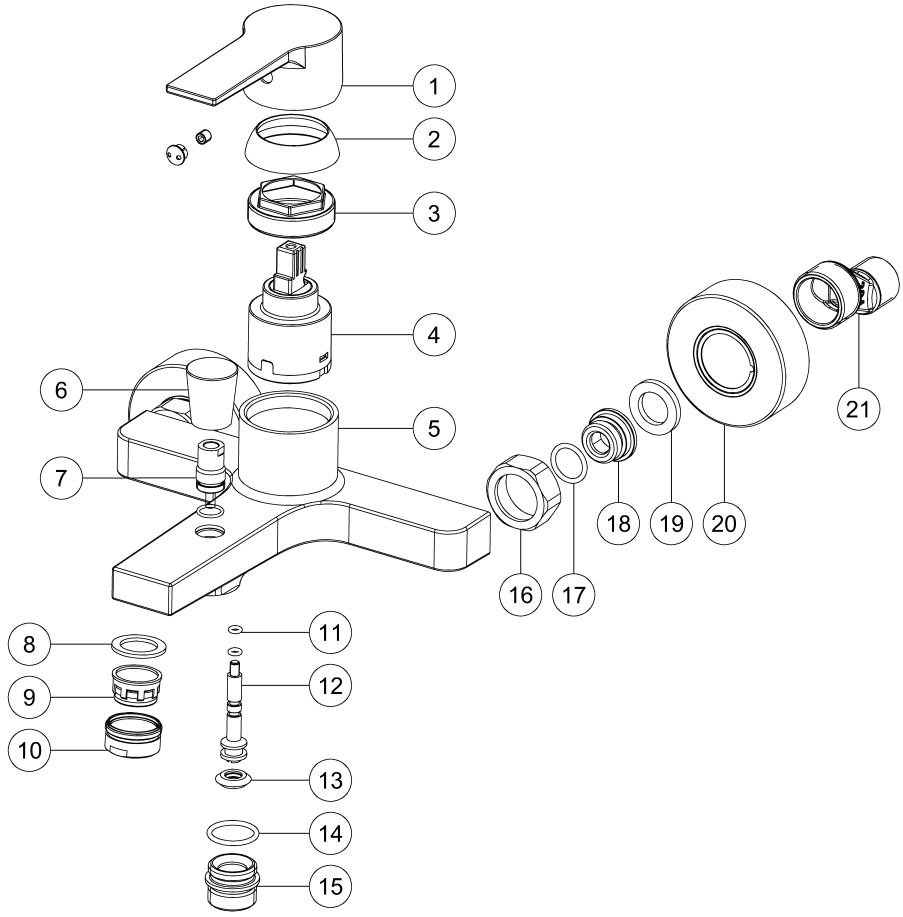

Safety Warnings

- This tap is designed exclusively for the supply of drinking water. Do not use it for any other liquids or substances that could compromise its safety or functionality.
- Always follow the installation, usage, and maintenance instructions provided by Standard Hidráulica, S.A.U.
- Before installation, ensure that the pipework is clean and free from debris that could affect the tap's performance.
- Use appropriate tools during installation to avoid damaging the tap. Do not over-tighten fittings, as this may cause mechanical failure and/or leaks.
- Adjust the hot water temperature to prevent burns. Be aware that the tap body may become hot during use, posing a risk of burns upon contact.
- Do not leave the tap running unattended to prevent overflows and unnecessary water wastage.
- Operate the tap only within the pressure and temperature limits specified by Standard Hidráulica, S.A.U. Using it outside these parameters may lead to damage or reduce the product's lifespan. If the mains water pressure is high, it is advisable to install a pressure-reducing valve to protect the tap from excessive strain.
- Before installing, handling, or dismantling the tap, close the shut-off valve and release any residual water pressure.
- Periodically inspect all connections and O-rings for leaks or signs of wear and replace components if necessary.
- For repairs, use only original spare parts recommended by Standard Hidráulica, S.A.U. to ensure compatibility and reliability.
- The tap contains small components. Keep them out of the reach of young children to eliminate choking hazards.
- Avoid using aggressive or abrasive cleaning agents, as these may damage the tap's surface finish or internal components.
- After installation, dispose of the packaging responsibly in accordance with local waste disposal regulations.
- At the end of the tap's service life, recycle or dispose of it in accordance with local regulations governing metal and plastic waste.

Latest update: 06/10/2026